KL-HERC 6" / 4" / 2.5" SCHEMATIC

CAL. 4.5MM (.177 in)
CAL. 6.0MM

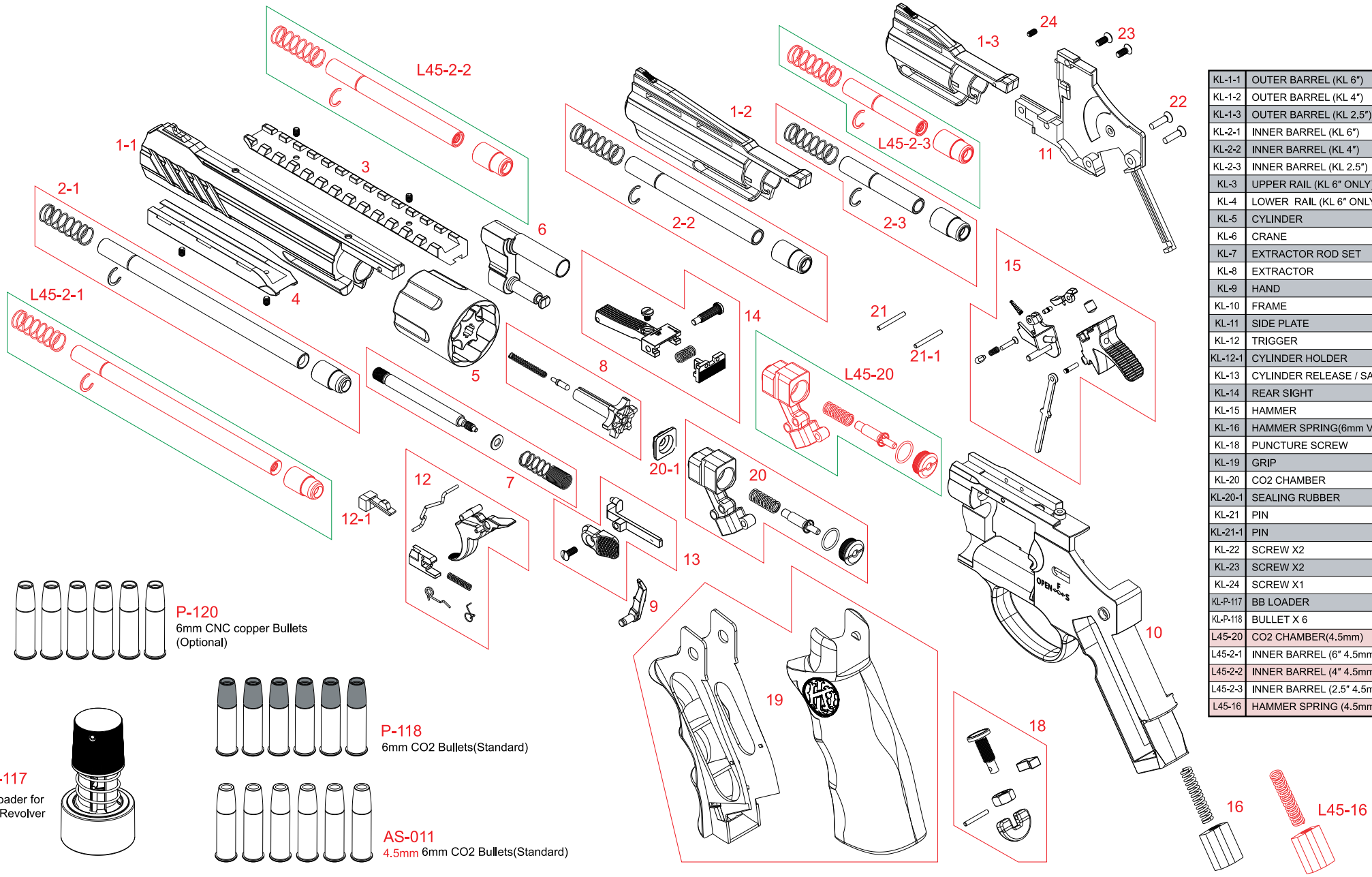

KL-1-1	OUTER BARREL (KL 6")
KL-1-2	OUTER BARREL (KL 4")
KL-1-3	OUTER BARREL (KL 2.5")
KL-2-1	INNER BARREL (KL 6")
KL-2-2	INNER BARREL (KL 4")
KL-2-3	INNER BARREL (KL 2.5")
KL-3	UPPER RAIL (KL 6" ONLY)
KL-4	LOWER RAIL (KL 6" ONLY)
KL-5	CYLINDER
KL-6	CRANE
KL-7	EXTRACTOR ROD SET
KL-8	EXTRACTOR
KL-9	HAND
KL-10	FRAME
KL-11	SIDE PLATE
KL-12	TRIGGER
KL-12-1	CYLINDER HOLDER
KL-13	CYLINDER RELEASE / SAFETY
KL-14	REAR SIGHT
KL-15	HAMMER
KL-16	HAMMER SPRING(6mm Ver.)
KL-18	PUNCTURE SCREW
KL-19	GRIP
KL-20	CO2 CHAMBER
KL-20-1	SEALING RUBBER
KL-21	PIN
KL-21-1	PIN
KL-22	SCREW X2
KL-23	SCREW X2
KL-24	SCREW X1
KL-P-117	BB LOADER
KL-P-118	BULLET X 6
L45-20	CO2 CHAMBER(4.5mm)
L45-2-1	INNER BARREL (6" 4.5mm Ver.)
L45-2-2	INNER BARREL (4" 4.5mm Ver.)
L45-2-3	INNER BARREL (2.5" 4.5mm Ver.)
L45-16	HAMMER SPRING (4.5mm Ver.)

www.krownland.com.tw sales@krownland.com.tw